Mitronix

Part #: **WS-207**

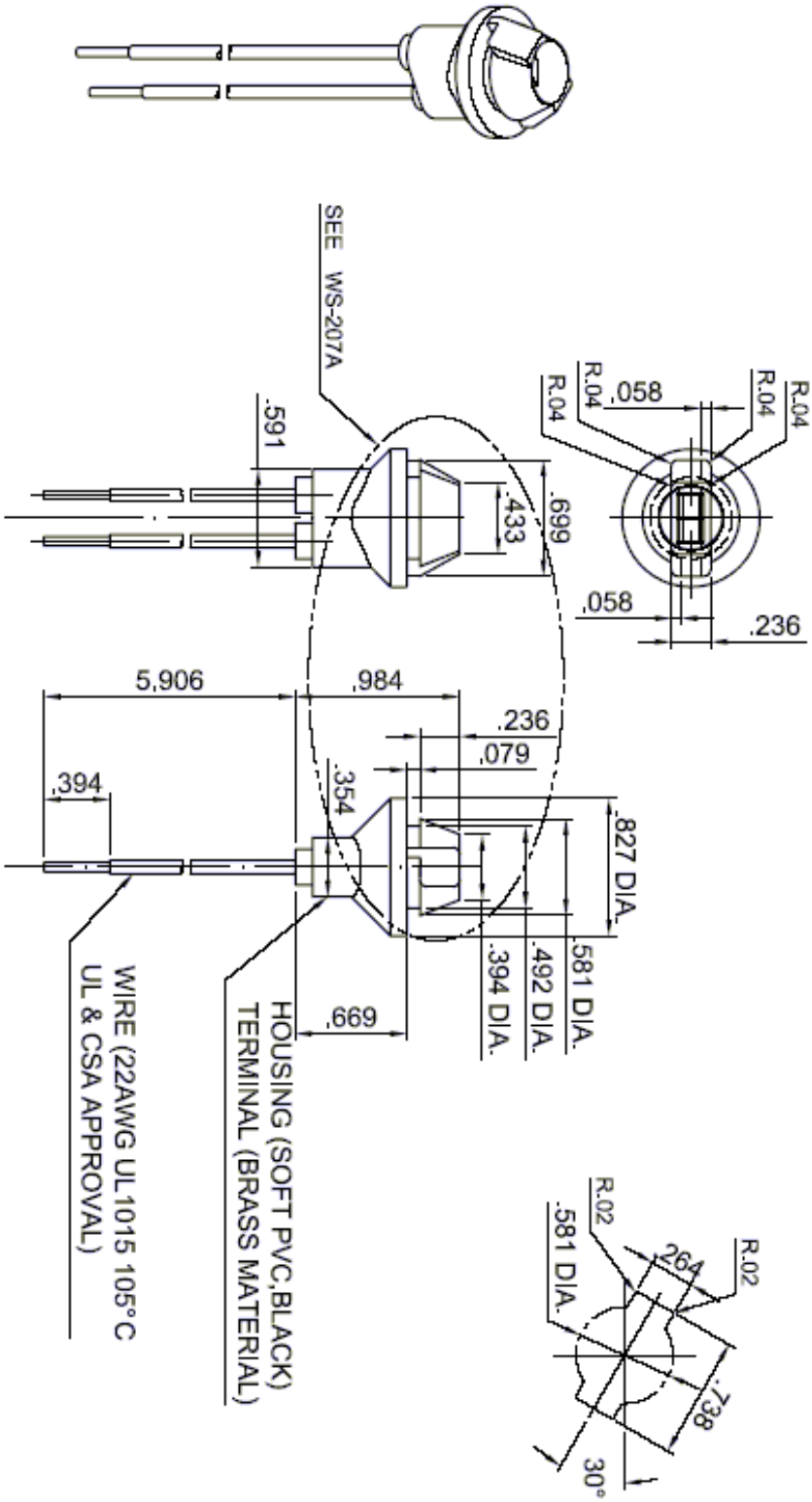

Mitronix, Inc. * 239 Old Tappan Road * Old Tappan, NJ 07675 * TEL: (201) 263-0063 * FAX: (201) 263-0016 *